3591001-02 - Downloaded from www.volvopenta.com 27/03/2015 19:22:16

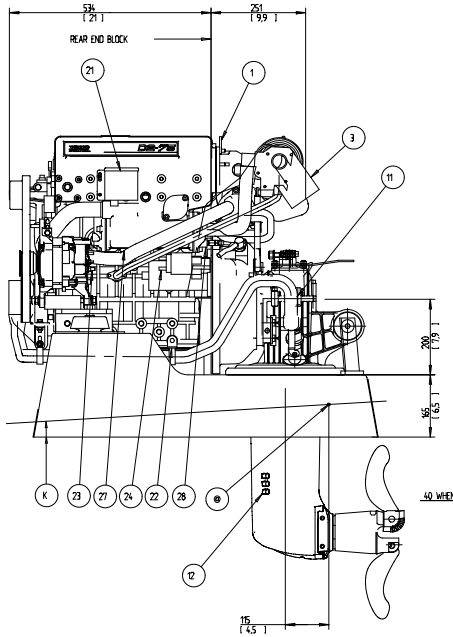

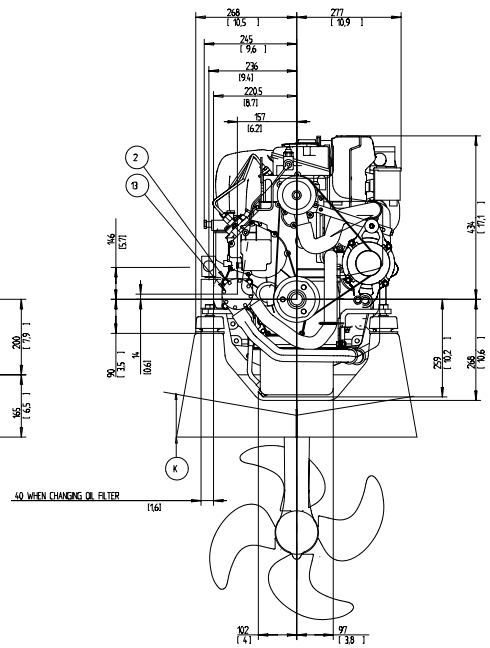

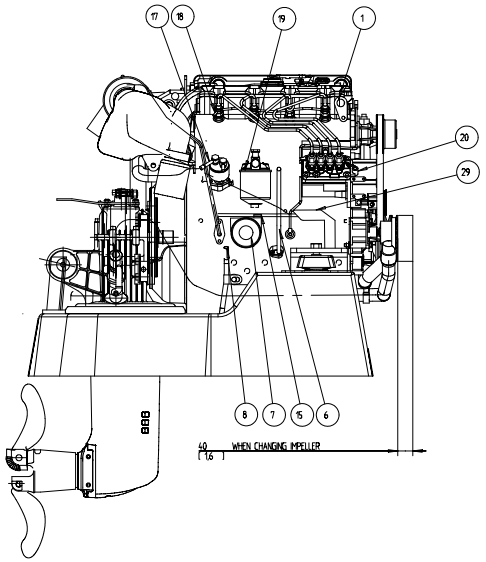

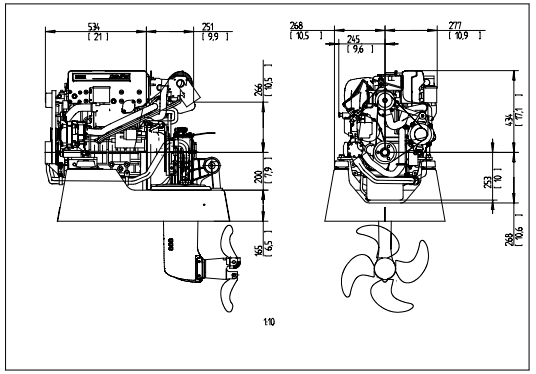

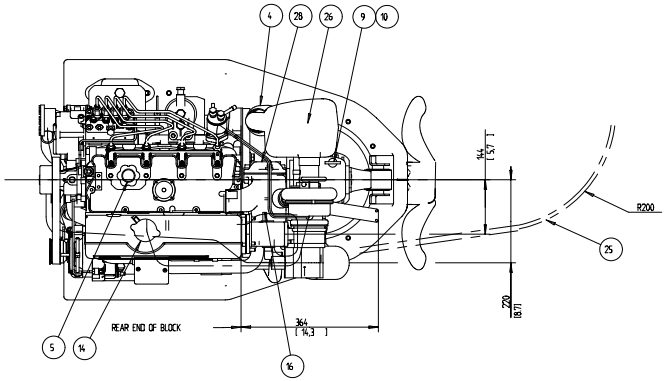

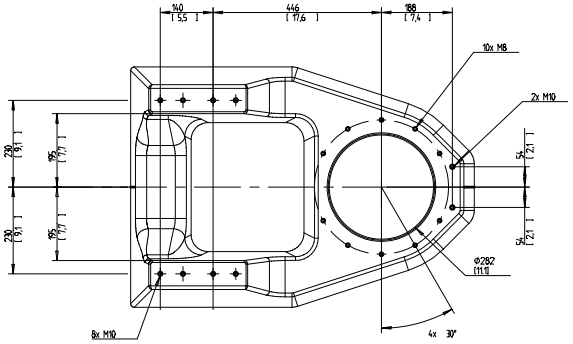

K LOWER EDGE TO BE CUT ACC. TO HULL FROM

⊕ REF. POINT SEE INST HANDBOOK PUBL No 77420/18

1 LIFTING DEVICE

2 WATER INLET, SEA WATER PUMP FOR HOSE ID 32

3 EXHAUST ELBOW FOR HOSE ID 89

4 AIR FILTER

5 OIL FILLING

6 OIL DIPSTICK ENGINE

7 OIL FILTER

8 OIL DRAIN FOR PUMP, ENGINE

9 OIL DIPSTICK S-DRIVE

10 OIL FILLER CAP S-DRIVE

11 WATER OUTLET, SEA COCK FOR HOSE ID 32

12 WATER INLET

13 SEA WATER PUMP

14 WATER FILLER CAP FRESH WATER

15 HEAT WATER OUTLET

16 HEAT WATER INLET

17 FUEL CONNECTION FOR HOSE ID 9

18 FUEL RETURN CONNECTION FOR HOSE ID 9

19 FUEL FILTER

20 SPEED CONTROL LEVER

21 CONNECTION BOX FOR EXTENTION CABLE

22 BATTERY MINUS (-) CONNECTION

23 PLUS (+) CONNECTION FOR CHARGING DISTRIBUTOR

24 STARTER BATTERY PLUS (+) CONNECTION

25 GEAR SHIFT CONTROL CABLE

26 AIR INLET SILENCER

27 WATER DRAIN, FRESH WATER

28 WATER DRAIN, SEA WATER

29 THROTTLE CONTROL CABLE

SCALE 1:5

RELEASED

SEE EDB

SYMBOLS, DESIGNATIONS AND GENERAL DRAWING METHODS STD 1007007

Drawing
ENGINE INSTALLATION
D2-75 / 150S

Drawing type
INSTALLATION DRAWING

VOLVO PENTA

Drawing No 3591001 | Issue letter 02 | Sheet No 1/1